DEGSON ELECTRONICS CO., LTD.

Product Specification

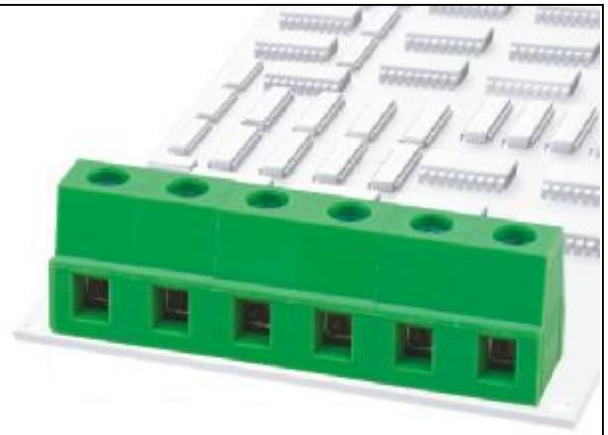

DG128-7.5

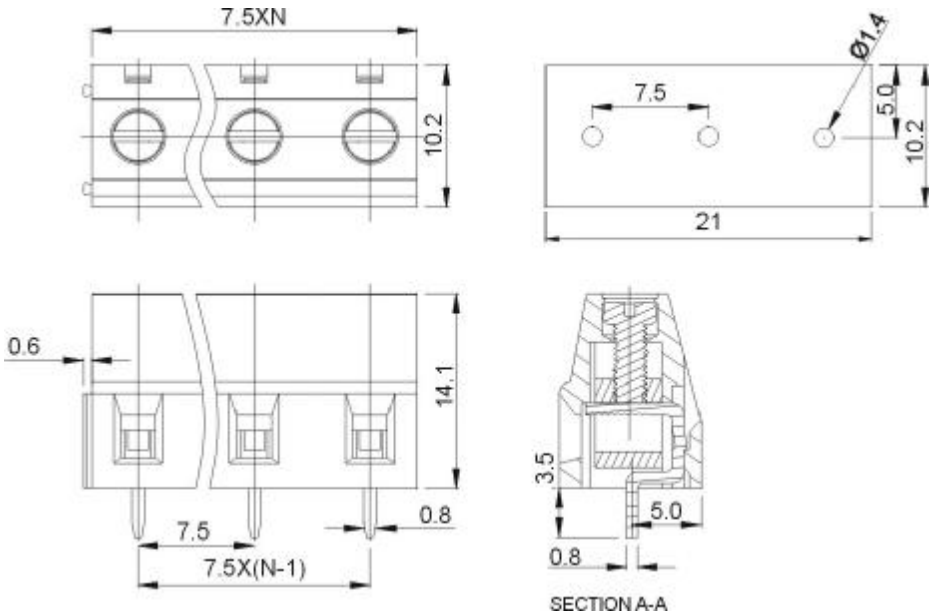

APPROVAL		
Electrical		
Standard	UL	IEC
Rated voltage	300V	450V
Rated current	10A	18A
Wire range	24-12AWG	2.5mm^2
Withstanding voltage	AC2500V/1Min	
Menchanical		
Torque	0.4Nm(3.5Lb-In)	
Ambient temperature	-40℃~+105 ℃	
Strip length	7mm	
Dimensions		
pitch	7.5mm(.295″)	
Poles	2P,3P-24P	
Material		
Housing	PA66,UL94V-0	
Screws	M2.5,Steel, Cr^{3+}Znplated	
Pin header	Brass,Tin-plated	
Cage	Brass,Ni-plated	

HOW TO ORDER :

[ ] – [ ][ ] P — 1 [ ] — X X X Customer Request

Series number

No.of pole

1	Single pitch
2	Double pitch

Color

1	Grey	4	Green	7	Trans Parent
2	Blue	5	Orange	8	Yellow
3	Black	6	Red	9	White

mm (INCH)

THIROANGLE PROJECTION

DEGSON ELECTRONICS CO., LTD.

NAME DG128-7.5

PDF 文件使用 "pdfFactory Pro" 试用版本创建 www.fineprint.cn