DEGSON ELECTRONICS CO., LTD.

Product Specification

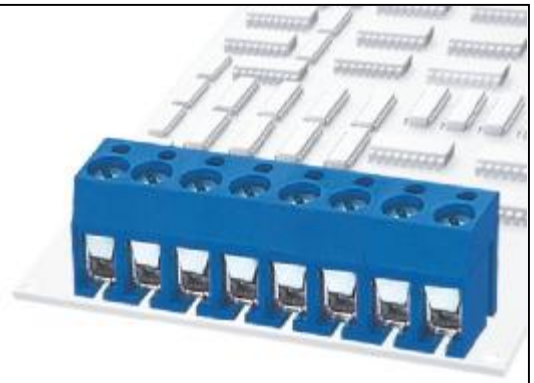

DG305-5.0

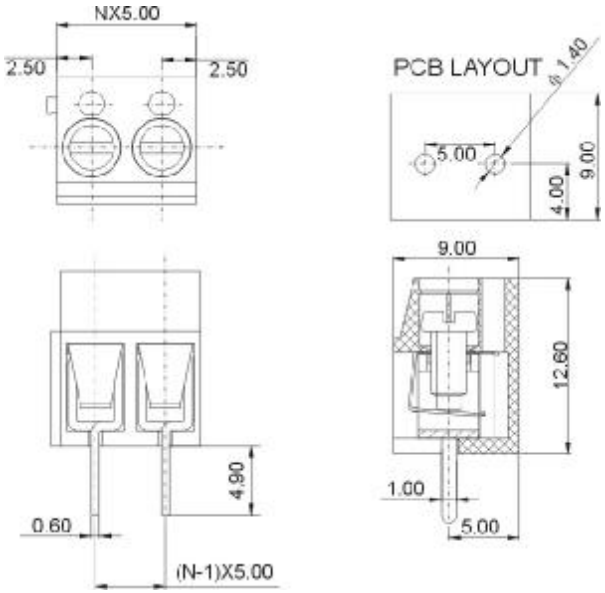

APPROVAL		
Electrical		
Standard	**UL**	**IEC**
Rated voltage	300V	250V
Rated current	15A	20A
Wire range	22-14AWG	2.5mm^2
Withstanding voltage	AC2000V/1Min	
Mechanical		
Torque	0.4Nm(3.5Lb-In)	
Ambient temperature	-30℃~+120 ℃	
Strip length	5-6mm	
Dimensions		
Pitch	5.0mm(.197″)	
Poles	2P,3P-24P	
Material		
Housing	PBT,UL94V-0	
Screws	M2.5,steel, Cr^{3+} Zn-plated	
Pin header	Brass,Tin plated	
Wire guard	Stainless steel	

HOW TO ORDER :

[ ] – [ ][ ] P — 1 [ ] — X X X (Customer Request)

Series number — **No.of pole**

1	Single pitch
2	Double pitch

Color

1	Grey	4	Green	7	Trans Parent
2	Blue	5	Orange	8	Yellow
3	Black	6	Red	9	White

mm (INCH)	DEGSON ELECTRONICS CO., LTD.
THIROANGLE PROJECTION	NAME DG305-5.0

PDF 文件使用 "pdfFactory Pro" 试用版本创建 www.fineprint.cn